Concept and Understanding of PPAP

PPAP – Production Part Approval Process

****This is for basic understanding against each elements of PPAP according to AIAG guideline.
To understand the details on each element, required separate presentation and guidance to perform and evaluate.**

Jankrut Dave

Introduction of PPAP

The Production Part Approval Process (PPAP) handbook is an industry standard that outlines the process to demonstrate engineering design and product specifications are met by the supplier’s manufacturing process. Through PPAP, suppliers and customers agree upon the requirements needed to obtain approval of supplier manufactured parts. Applicable to all parts and commodities, PPAP principles help reduce delays and non-conformances during part approval by providing a consistent approval process.

The purpose of PPAP is for suppliers to demonstrate that they have understood the customer's design and in series production, to produce products that consistently meet all requirements and specifications, while maintaining the production rate

Introduction of PPAP

PPAP : Production Part Approval Process
The Production Part Approval process is a framework of requirements for series parts used in the automotive environment.
PPAP is used to prove the quality of suppliers and their manufacturing processes.
PPAP is a very useful and valuable tool for establishing confidence in component suppliers and their production processes.
As today's competitive manufacturing environment, controlling on cost and maintain high level of quality is become vital to the success of any organization.
Increasing of equipment , material and labor cost combined with expanding world markets have resulted in an increase of outsourced parts. Many component parts are being outsourced to overseas manufacturers. This often results in longer lead times and larger order quantities.

Hence it have become imperative to provide quality parts that meet the customers requirements the first time and every time. Initially PPAP was utilized by the automotive and aerospace industries. PPAP is now being utilized by several industries to improve communication and provide qualitative products to the customers. Within the automotive industry the ultimate resources for PPAP information is the manual published by the Automotive Industry Action Group (AIAG)

What is PPAP and Why to Perform

It defines the approval process for new or revised parts, or parts produced from new or significantly revised production methods. PPAP process consists of total 18 elements that may be required for approval of production level parts. Not all elements are required for every submission.
There are five generally accepted PPAP submission levels.
PPAP Manual contains detailed information, guidelines and sample documents useful for completing the process requirements. The resulting PPAP submission provides the evidence that the supplier has met or exceeded the customers requirements and the process is capable of consistently reproducing quality parts.

PPAP verifies that the supplier understands all customer engineering design specifications and requirements and that the process is capable of consistently producing product which are meeting those requirements during an actual production run at the QUOTED PRODUCTION RATE.PPAP and other quality tools continue to be implemented into more industries , therefore it is important to gain an understanding of the PPAP requirements to remain competitive as a supplier who supplies parts to the customer.

- Required for any new part submission as well as for approval of any change to an existing part or process.
- The customer may request a PPAP at any time during the product life.

Benefits and Specific Challenges addressed by PPAP

•Consistent part approval process
•Assurance parts conform to customer requirements
•Evidence of process stability
•Controls product and process change process, providing an approval outlet for all changes to ensure conformance to the next level assembly/process

•Provides understanding of information required to obtain part approval and standardizes the part approval process
•How to obtain approval of parts/processes after part design changes and/or process changes
•Ensures part submissions are submitted with proper information and enough data to sustain product conformance
•Provides a record of part conformance at launch (allows for measurement of drift from origin)
•Details pertinent design records to ensure traceability of part design status at origin
•Controls product and process change process, providing an approval outlet for all changes to ensure conformance to the next level assembly/process

Levels of PPAP

- Level 1 – Part Submission Warrant (PSW) only submitted to the customer
- Level 2 – PSW with product samples and limited supporting data
- Level 3 – PSW with product samples and complete supporting data
- Level 4 – PSW and other requirements as defined by the customer
- Level 5 – PSW with product samples and complete supporting data available for review at the supplier's manufacturing location

Elements of PPAP : Submission Level wise

		Submission Level				
Requirement		*Level 1*	*Level 2*	*Level 3*	*Level 4*	*Level 5*
1.	Design Record	R	S	S	*	R
	- for proprietary components/details	R	R	R	*	R
	- for all other components/details	R	S	S	*	R
2.	Engineering Change Documents, if any	R	S	S	*	R
3.	Customer Engineering approval, if required	R	R	S	*	R
4.	Design FMEA	R	R	S	*	R
5.	Process Flow Diagrams	R	R	S	*	R
6.	Process FMEA	R	R	S	*	R
7.	Control Plan	R	R	S	*	R
8.	Measurement System Analysis Studies	R	R	S	*	R
9.	Dimensional Results	R	S	S	*	R
10.	Material, Performance Test Results	R	S	S	*	R
11.	Initial Process Studies	R	R	S	*	R
12.	Qualified Laboratory Documentation	R	S	S	*	R
13.	Appearance Approval Report (AAR), if applicable	S	S	S	*	R
14.	Sample Product	R	S	S	*	R
15.	Master Sample	R	R	R	*	R
16.	Checking Aids	R	R	R	*	R
17.	Records of Compliance With Customer-Specific Requirements	R	R	S	*	R
18.	Part Submission Warrant (PSW)	S	S	S	S	R
	Bulk Material Checklist (see 4.1 above)	S	S	S	S	R

Element 1 : Design Records

Element 1 : Design Records

Design record include both a copy of the customer and the suppliers' drawings.
It should also include a copy of the purchase order received to the supplier.

A part drawing of the component, usually provided by the customer. Each feature of the part drawing must be ballooned to match the inspection results. This needs to include print notes, standard tolerance notes and specifications, as well as any other information relevant to the design of the part.

The Purchase order is used to confirm that the correct part is being ordered and that it is at the correct revision level.

It’s the responsibility of the design engineer to verifying that drawings at supplier end match with customer drawing and all critical or key characteristics have been identified and recorded.

These documents include detailed engineering drawings, specifications, and any other relevant design-related information that define the part's dimensions, features, and functional requirements.

Example of Engineering Drawing

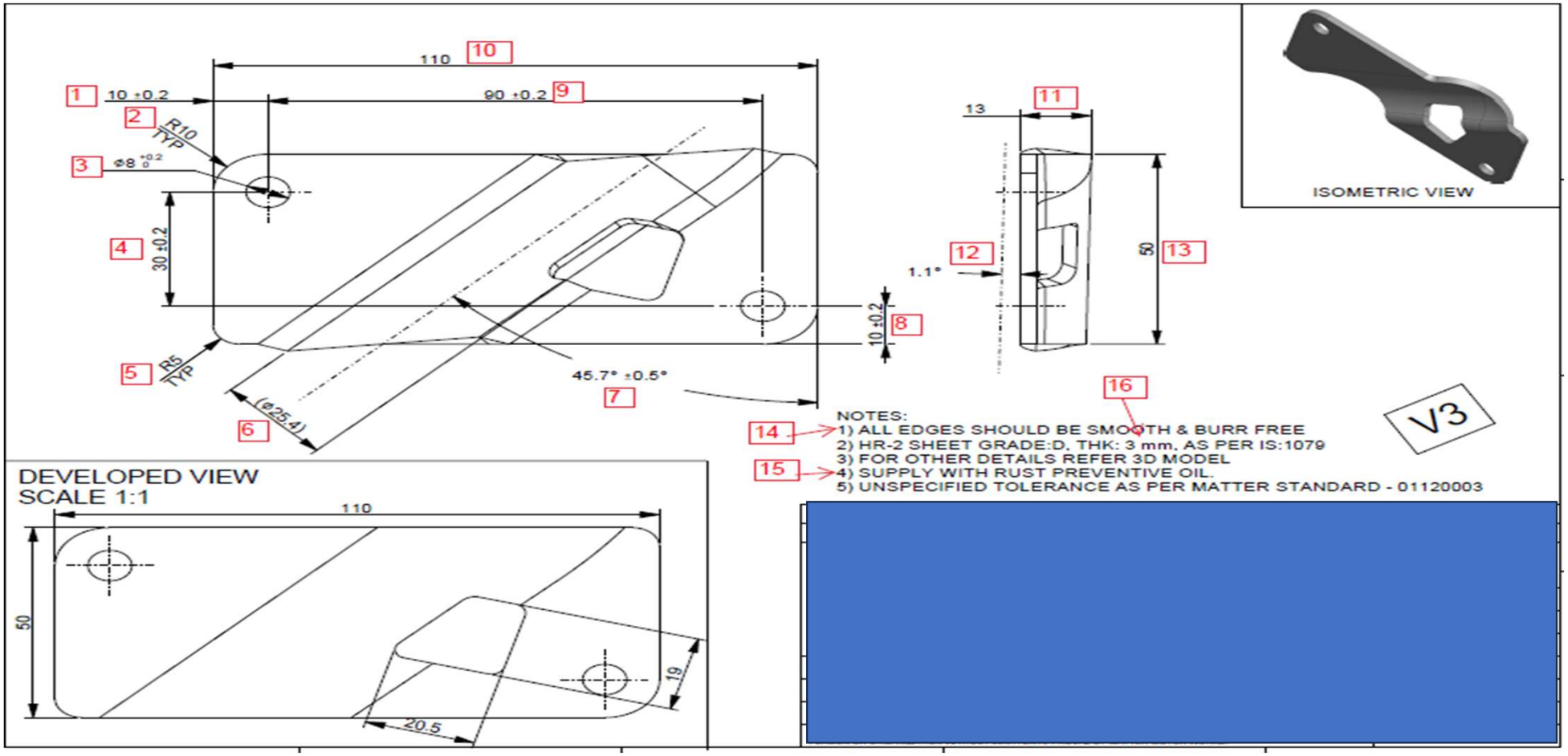

Element 2 : Engineering Change

Engineering change document is required due to a request for a change to a part or product, the documentation requesting and approving the change must be included in the PPAP Package.

It usually consists of a copy of the Engineering Change Notice (ECN) which must be approved by the customer engineering department.

showing the detailed description of a change, which is usually called a "technical change note". This document is only required when a change has been made

Element 3 : Customer Engineering Approval

When Customer Engineering Approval required as part of the PPAP, the supplier must provide evidence of approval by the customer engineering department

If it is required, pre-PPAP samples are ordered by the customer for onsite testing. The samples must be production intent and ship with a waiver so that testing can be done.

When testing is complete, the test engineers will provide an approval form for inclusion in the PPAP submission.

Note: A copy of a “Temporary Deviation” is normally required to submit parts to the customer prior to a PPAP approval.

Element 4 : Design Failure Mode and Effect Analysis

DFMEA is a cross functional activity that examines design risk by exploring the possible failure modes and their effects on the product or customer and their probability to occur.
Failure mode can include :

- Product Malfunctions
- Reduced performance or product life
- Safety and Regulatory issues.

DFMEA is a living document that should be reviewed and updated **throughout the product life cycle**.

Design Failure Mode and Effect Analysis (DFMEA) is an application of the Failure Mode and Effects Analysis (FMEA) that is specific to the design stage. The DFMEA allows the design team to document what they predict about a product's potential failures before completing a design and use this information to mitigate the causes of failure

DFMEA is a methodical approach used for identifying potential risks introduced in a new or changed design of a product/service. The Design FMEA initially identifies design functions, failure modes and their effects on the customer with corresponding severity ranking / danger of the effect. Then, causes and their mechanisms of the failure mode are identified. High probability causes, indicated by the occurrence ranking, may drive action to prevent or reduce the cause’s impact on the failure mode. The detection ranking highlights the ability of specific tests to confirm the failure mode / causes are eliminated. The DFMEA also tracks improvements through Risk Priority Number (RPN) reductions. By comparing the before and after RPN, a history of improvement and risk mitigation can be chronicled.

Element 5 : Process Flow Diagram

The process flow diagram (PFD) explains the entire process for assembling the component or final assembly in a graphical manner.

It includes incoming material, Inspection , Press steps, Incoming sources of variation, characteristics of product and process, any test to be perform, rework and shipping of product.

The Process Flow Diagram shows all the steps required in the manufacturing of the part. It should include all of the main steps in the processing of the part including incoming components, measuring, and inspection. The Process Flow Diagram should match the control plan and the Process Failure Mode and Effects Analysis (PFMEA) and also includes the flow of non-conforming materials and parts.

Element 5 : Process Flow Diagram

			Organization Name								Document NO : Rev No : Implement Date :
Item:			Process Responsibility :					Process Identification :			
Process flow no:-											
Part no.			Customers Part No :								
Model Year:								Prepared by			
Core Team:			Key Date			Date (Originated)				Date (Revised)	
Operation :											
Operation No.	**Brief Description**	**Machine / Equipment**	**Incoming Source of Variation**	**Process Flow Diagram**					**Product Characteristic**		**Process Variable / Process Characteristic**
				Operation	**Inspection**	**Transport**	**Delay**	**Storage**			
									Major		
10 A	Raw material receipt Bought outs	Stacker , Bins , Trolly	Wrong documents, wrong quantity, damaged parts due to packaging						No damage or Defects from transit.		Verify Quantity and incoming part description with PO description
	Inspection	Related Measuring instruments / Equipments and Test Certificate.	Defective parts from supplier, wrong material certificate, wrong material, dimension variation						As per Drawing of Child part.		As per incoming Quality Assurance Plan(QAP).
									Free from Corrosion, shelf life		Storage as per defined location,

Element 6 : Process Failure Mode and Effect Analysis

PFMEA is a methodical approach used for identifying risks on process changes. The process FMEA initially identifies process functions, failure modes their effects on the process.

If there are design inputs, or special characteristics, the effect on end user is also included. The severity ranking or danger of the effect is determined for each effect of failure. Then the causes and their mechanisms of the failure mode are identified.

The assumption that the design is adequate keeps the focus on the process. The detection ranking determines the ability of specific tests to confirm the failure mode / causes are eliminated. The PFMEA also tracks improvements through Risk Priority Number (RPN) reductions. By comparing the before and after RPN, a history of improvement and risk mitigation can be chronicled

For detail about PFMEA : Refer AIAG guideline for FMEA

Why to perform PFMEA

Risk is the substitute for failure on new processes.

It's a good habit to identify risks for each process step as early as possible for a robust process.
The main goal is to identify risk prior to tooling acquisition. Mitigation of the identified risk prior to first article or PPAP will validate the expectation of superior process performance.

Risks are identified on new technology and processes, which if left unattended, dould result in failure. The PFMEA is applied when :

- There is a new technology or new process introduced
- There is a current process with modifications, which may include changes due to updated processes, continuous improvement, KAIZEN or COQ(Cost of Quality).
- There is a current process exposed to a new environment or change in location (No physical change made to process)

There are five primary sections of the Process FMEA. Each section has a distinct purpose and a different focus. The PFMEA is completed in sections at different times within the project timeline, not all at once. The Process FMEA form is completed in the following sequence:

PFMEA Sample as per AIAG VDA FMEA Guidline

Form C: Standard PFMEA Form Sheet

Process Failure Mode and Effects Analysis (Process FMEA)

PLANNING and PREPARATION (STEP 1)

Company Name:
Plant Location:
Customer Name:
Model Year / Program:

Subject:
PFMEA Start Date:
PFMEA Revision Date:
Cross-Functional Team:

PFMEA ID Number:
Process Responsibility:
Confidentiality Level:

CONTINUOUS IMPROVEMENT	STRUCTURE ANALYSIS (STEP 2)			FUNCTION ANALYSIS (STEP 3)			FAILURE ANALYSIS (STEP 4)			
History / Change Authorization (As Applicable) (This column is optional)	1. Process Item System, Subsystem, Part Element or Name of Process	2. Process Step Station No. and Name of Focus Element	3. Process Work Element 4M Type	1. Function of the Process Item Function of System, Subsystem, Part Element or Process	2. Function of the Process Step and Product Characteristic (Quantitative value is optional)	3. Function of the Process Work Element and Process Characteristic	1. Failure Effects (FE)	Severity (S) of FE	2. Failure Mode (FM) of the Process Step	3. Failure Cause (FC) of the Work Element

RISK ANALYSIS (STEP 5)							OPTIMIZATION (STEP 6)												
Current Prevention Control (PC) of FC	Occurrence (O) of FC	Current Detection Controls (DC) of FC or FM	Detection (D) of FC/FM	PFMEA AP	Special Characteristics	Filter Code (Optional)	Prevention Action	Detection Action	Responsible Person's Name	Target Completion Date	Status	Action Taken with Pointer to Evidence	Completion Date	Severity (S)	Occurrence (O)	Detection (D)	PFMEA AP	Special Characteristics	Remarks

Element 7 : Control Plan

The **Control Plan** is an output from the PFMEA. The Control Plan lists all product Special Characteristics and inspection methods required to deliver products that continually meet the customer quality requirements.

The control plan document describes the actions(Measurements, Inspections, Quality Checks or monitoring or process parameters) required at each phase of a process to assure the process outputs will conform to pre-determined requirements. In a simple manner, the control plan provides the operator or inspector with the information required to properly control the process and produce quality parts or assemblies. It should also include instructions regarding actions taken if a non conformance is detected. The control plan does not replace detailed operator instructions(Work Instructions). In some cases the Control Plan is used in conjunction with and inspection sheet or checklist. The Control Plan helps assure quality si maintained in a process in the event of employee turnover by establishing a standard for quality inspection and process monitoring. Control Plan are living documents that should be periodically updated as the measurement methods and controls are improved throughout the life cycle of the product.

Developing and implementing Control Plan Methodology has several benefits. The use of Control Plans helps reduce or eliminate waste in a process. Businesses today must reduce waste everywhere possible. The Control Plan improves product quality by identifying the sources of variation in a process and establishing controls to monitor them. Control Plans focus on the product characteristics most important to the customer and the business. By focusing on what is critical to quality during the process, you can reduce scrap, eliminate costly reworks and prevent defective product from reaching the customer. When scrap and reworks are reduced, throughput of the process is inherently improved. Manufacturing efficiency is improved and your company’s bottom line is impacted in a positive manner

The Control Plan should be developed by a Cross Functional Team (CFT) that has an understanding of the processs being controlled or improved. It is a Plan developed by the team to control the process and ensure the process produces quality parts that met the customer requirements. The information contained in the control plan can originate from several sources, including but not limited to the following :

Process Flow Diagram (PFD)
Design Failure Mode and Effect Analysis (DFMEA)
Process Failure Mode and Effect Analysis (PFMEA)
Matrix of Special Characteristics (SC,CC,Key)
LLC from similar parts
Design Reviews
Team knowledge about the process
Field or warranty issues

Throughout the life cycle of a product, the information contained in the list above frequently changes or the content grows. Therefore the Control Plan must be a living document, continuously updated as new information is added. The Control Plan therefore is an integral part of an effective product quality system.

CONTROL PLAN

Proto type	**Pre Launch**	**Production**	Key Contact										
Control Plan no.			Core Team				Engg. Approval / Date:		--		Date (Orig)		
Part / Assembly No.													
Part Name.			Plant:				Quality Approval / Date:		--		Rev #		
Process Name and No													
Latest Drawing Change level.:			Plant Approval / Date:				Other Approval / Date		--		Date (Rev.)		
Model No :													
Part / Process no.	Process Name / Operation Description.	Machine, Device, Jig, Tools for Mfg.	No.	Characteristics Product	Characteristics Process	Spl. Char. Class	Product / Process Specification/ Tolerance	Methods Evaluation Measurement Techniques	Least Count	Sample Size	Sample Freq	Control Method	R E S P	Reaction Plan

Element 8 : Measurement System Analysis (MSA)

MSA is defined as an experimental and mathematical method of determining the amount of variation that exists within a measurement process. Variation in the measurement process can directly contribute to our overall process variability. MSA is used to certify the measurement system for use by evaluating the system's accuracy, precision and stability.

WHAT IS MEASUREMENT SYSTEM :

A Measurement system has been described as a system of related measurement system and some of the common sources of variation. A measurement system has been described as a system of related measures that enables the quantification of particular characteristics. It can also include a collection of gauges, fixtures, software and personnel required to validate a particular unit of measure of make an assessment of the feature characteristic being measured. The sources of variation in a measurement process can include the following :

- Process – test method, specification
- Personnel – the operators, their skill level, training, etc.
- Tools / Equipment – gages, fixtures, test equipment used and their associated calibration systems
- Items to be measured – the part or material samples measured, the sampling plan, etc.
- Environmental factors – temperature, humidity, etc.

All of these possible sources of variation should be considered during Measurement System Analysis. Evaluation of a measurement system should include the use of specific quality tools to identify the most likely source of variation. Most MSA activities examine two primary sources of variation, the parts and the measurement of those parts. The sum of these two values represents the total variation in a measurement system

Element 9 : Dimensional Results

Dimensional layout of sample parts is required to validate the product meets the print specifications. The samples should be randomly selected from a significant production run usually at least 30 pieces. Each dimension on the drawing is measured on the final assembly to make sure that it falls within specification. The results are recorded in a spreadsheet and included within the PPAP submission.

Dimensional layout required all dimensional , GD&T , Attribute as well as notes available into final print into separate spreadsheet with dimensional decisions. For all CTQ’s there should be separate capability study has to be performed.

Element 10 : Records of Material / Performance Tests

This element should contain a copy of DVP&R. The DVP&R is a summary of every validation test performed on the product /part. Result of each and every test has to be recorded and review during PPAP.

This also include copies of all the certification documents for all materials(Steel, Plastics,Rubber,Non ferros etc.) listed on the prints. The material certification shall show compliance to the specific call on the print.

For material test certificate, supplier also upload all material specifications into MDS (Material Data Sheet) web portal to review and maintaining material properties for final product/ assembly to the customer.

Element 11 : Initial Process Studies

Initial Process Studies will be done on all the production processes and will include Statistical Process Control (SPC) charts on the critical characteristics of the product. These studies demonstrate that the critical processes are stable, demonstrate normal variation and are running near the intended nominal value.

For initial production run for PPAP : It is recommended to perform Pp and Ppk studies at supplier to understand common and special causes of variations into process.

Element 12 : Qualified Laboratory Documents

Qualified laboratory documentation consists of the industry certifications for any lab that was involved in completing validation testing. This could be for an in-house test lab or any offsite contracted test facilities that were used for validation or material certification testing.

Qualified laboratory should have NABL or other equivalent certification which can ensure correct calibration / testing to be performed as per international standard procedure.

If an organization having any laboratory or testing performed inhouse, in that case organization should have submit their internal lab scope and their certification equivalent to NPL / IPL.

Element 13 : Appearance Approval Report

The appearance Approval Report (AAR) is applicable for components affecting appearance only. This report verifies that the customer has inspected the final product and it meets all the required appearance specifications for the design. The appearance requirements could include information regarding the color, textures etc.

Element 14 : Sample Production Parts

Sample production parts are sent to the customer for approval and are typically stored at either the customer or supplier’s site after the product development is complete.
A picture of the production parts is usually included in the PPAP documentation along with documentation regarding the location that the parts are being stored.

Element 15 : Master Sample

A master sample is a final sample of the product that is inspected and signed off by the customer.

The master sample part is used to train operators and serves as a benchmark for comparison to standard production parts if any part quality questions arise.

Element 16 : Checking Aids

Checking Aids used by production is listed down under this element.

It should include all tools(Measuring and Monitoring Devices) used to inspect, test or measure parts during the assembly / manufacturing process.

It should describe the device and having calibration schedule for the device.

It may include check fixtures, contour, variable and attribute gauges, models , templates.

A detailed MSA may be required for all checking aids based on customer requirements to ensure correct device to be use for measuring and decision making.

Element 17 : Customer Specific Requirement (CSR)

In this element, each and every requirement which are specially raised by the customer are recorded and fulfilled by the supplier.

Supplier should demonstrate the requirement to be followed by documentation as well as witness during PPAP run.

For any customer who supposed to be in the supply chain for any OEM, their Supplier Quality Manual is the part of CSR for any Tier 1 , Tier 2 and throughout the supply chain.

Element 18 : Part Submission Warrant(PSW)

PSW form is a summary of the entire PPAP Submission.

PSW is required for each of part number unless otherwise stated by the customer.

PSW Includes :

1. The reason for submission (Design Change, Re validation, New submission, any tool change or transfer of tools, or an 4M changes into process or product)
2. Documents submitted to the customer according to PPAP Level.
3. Declaration of part conformity to the customer. Includes production Run @ Rate
4. Authorized person from supplier signature with contact details
5. An area for the customer declaration of the PPAP result.

Thank You